ENGINE POWER
90,0 kW / 121 HP @ 2.200 rpm

OPERATING WEIGHT
17.160 - 18.350 kg

BUCKET CAPACITY
max. 0,94 m³

KOMATSU

PC160LC-7

PC 160

HYDRAULIC EXCAVATOR

PC160LC-7

ecot3

WALK-AROUND

The PC160LC-7 is a rugged, productive, all-European machine. Designed and expressly built for European markets, it delivers productivity, reliability and operator comforts in a robust, environmentally-friendly package. Komatsu's exclusive, on-board, HydrauMind system assists in all operations, providing enhanced machine performance that's always perfectly matched to the task.

High productivity and low fuel consumption

The powerful turbocharged and air-to-air aftercooled Komatsu SAA4D107E-1 provides 90,0 kW / 122 HP. Productivity has increased with greater output in the 'Power' mode, while fuel efficiency has been further improved.

Excellent reliability and durability

- Reinforced work equipment
- Reliable major components designed and built by Komatsu
- Exceptionally-reliable electronic devices
- Strengthened undercarriage that utilises PC210 class components

Advanced Attachment Control

The PC160LC-7 can be optionally equipped to handle a wide variety of attachments.
The advanced attachment control system features:

- Operator selectable hydraulic flow control
- Adjustable presets for rapid attachment changeover
- Attachment piping options

KOMTRAX

Revolutionary machine management

Track and monitor your machine anytime, anywhere for total peace of mind.

PC160-7

ENGINE POWER
90,0 kW / 122 HP @ 2.200 rpm

OPERATING WEIGHT
17.160 - 18.350 kg

BUCKET CAPACITY
max. 0,94 m³

Easy maintenance

- Extended hydraulic filter replacement interval
- Remote-mounted engine oil filter and fuel drain valve, for easy access
- Standard-equipped water separator
- Easier radiator cleaning
- Increased fuel tank capacity
- SCSH bushings on the work equipment extend the lubricating interval significantly

SpaceCab™

- Sealed and pressurised cab with standard air conditioning
- Low-noise design
- Low-vibration design with cabin damper mounting
- OPG Level I (ISO) compliant cabin

ecot3
ecology & economy - technology 3

Protecting the environment

The Komatsu SAA4D107E-1 engine meets EU Stage IIIA and EPA Tier III emission regulations.
30% NOx reduction.

EMMS

EMMS (Equipment Management and Monitoring System)

The EMMS is a highly sophisticated system, controlling and monitoring all the excavator functions. The user interface is highly intuitive and provides the operator with easy access to a huge range of functions and operating information.

Four working modes

The PC160LC-7 is equipped with three working modes: (P, E, B), plus a lifting mode (L). Each mode is designed to match the engine speed, pump speed, and system pressure with the current operating requirement. This provides the flexibility to match equipment performance to the job at hand.

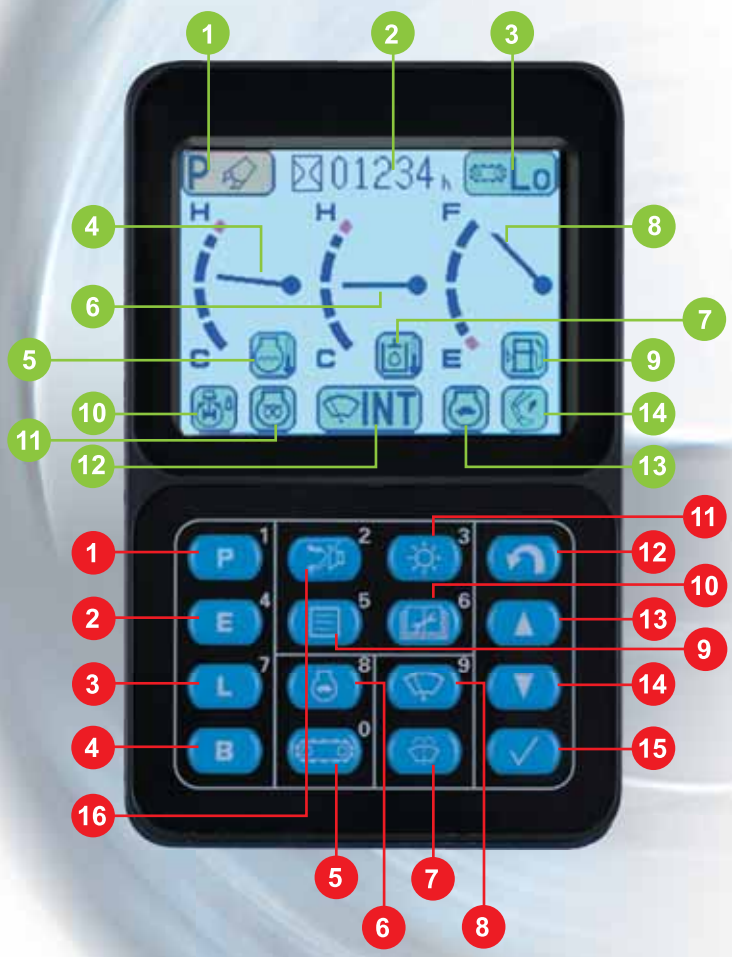

On-screen symbols

1. Operating mode
2. Service hours meter
3. Travel speed
4. Engine water gauge
5. Engine water temperature warning
6. Hydraulic oil gauge
7. Hydraulic oil temperature warning
8. Fuel level gauge
9. Fuel low level warning
10. Swing lock
11. Pre-heat
12. Continuous/intermittent window wiper
13. Auto deceleration
14. PowerMax

Push-button control switches

1. 'Power' mode
2. 'Economy' mode
3. 'Lifting' mode
4. 'Breaker' mode
5. Travel speed selector switch
6. Auto deceleration
7. Window washer
8. Window wiper
9. Select (For attachment oil flow adjustment)
10. Maintenance mode
11. Screen brightness adjustment
12. Input (return)
13. Input (up)
14. Input (down)
15. Input (confirm)
16. Buzzer cancel

Power mode
For maximum power and fast cycle times. Normally used for heavy operations such as hard digging and loading. This mode allows access to the 'PowerMax' function to temporarily increase the digging force by 7% for added power in tough situations.

Economy mode
The environmentally-friendly mode. For running more quietly during operations at night and/or in urban areas. Fuel consumption and exhaust emissions are reduced.

Breaker mode
Delivers optimal hydraulic pressure, flow and engine RPMs for powerful breaker operations.

Lifting mode
Increases the lifting capacity 7% by raising the hydraulic pressure. This mode supports safe lifting operations.

Working mode	Application	Advantage
P	Power mode	• Maximum production/power • Fast cycle times
E	Economy mode	• Excellent fuel economy
B	Breaker mode	• Optimum engine RPMs and hydraulic flow
L	Lifting mode	• Hydraulic pressure has been increased by 7%

Hydraulic flow general adjustment screen in B (breaker) mode

Easy to see and easy to use
Superb recognition colour LCD screens for each mode. Letters and numbers are combined with colour images for exceptionally clear and easy-to-read information. The high-resolution screen is easy to read in bright sunlight and in all lighting conditions.

Fine tune hydraulic flow adjustment screen in B (breaker) mode

Automatic two-speed travel

	High	Low
Travel speed	5,5 km/h	3,4 km/h

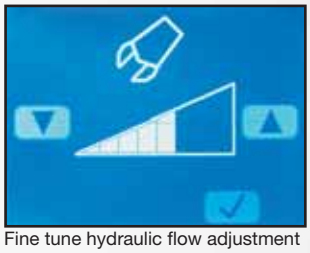
Fine tune hydraulic flow adjustment screen in P (power) or E (economy) mode

Fingertip hydraulic pump oil flow adjustment
From the LCD monitor, you can automatically select the optimal hydraulic pump oil flow for breaking, crushing, and other operations in the B, P or E modes. Also, when simultaneously operating with attachments and work equipment, the flow to the attachment is reduced automatically, thus delivering a smooth movement of the work equipment.

Password screen

Password protection
Prevents unauthorised machine use or transport. The engine cannot be started without your four-digit use or password. For total security, the battery is connected directly to the starter motor. Both the starter and the engine need the password. The password can be activated and deactivated upon request.

WORKING ENVIRONMENT

PC160LC-7's cab interior is spacious and provides a comfortable working environment...

SpaceCab™

Comfortable cab

The new PC160LC-7 inner cab volume is 14% greater than the Dash 6, offering an exceptionally comfortable operating environment. The large cab enables the seat, with headrest, to be reclined to horizontal.

Pressurised cab

The standard-equipped air conditioner, air filter and a higher internal air pressure resist dust entry into the cab.

Low-noise design

Noise levels are substantially reduced; engine noise as well as swing and hydraulics operations noise.

Cab damper mounting for low vibration levels

PC160LC-7 uses a new and improved viscous damping cab mount system that incorporates a longer stroke plus an added spring. The new cab damper mounting, combined with strengthened left and right-side decks, aids the reduction of vibrations to the operator's seat.

Outer air filter

Easy removal/installation of the air conditioner filter element, without tools facilitates easier cleaning.

Riding comfort comparison

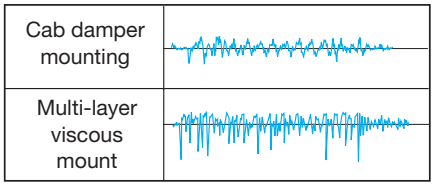

Vertical pitch oscillation on the graph shows the intensity of vibration

Conditions:
- Travelling over obstacle, one side track
- High-speed forward travel

— Floor vibration

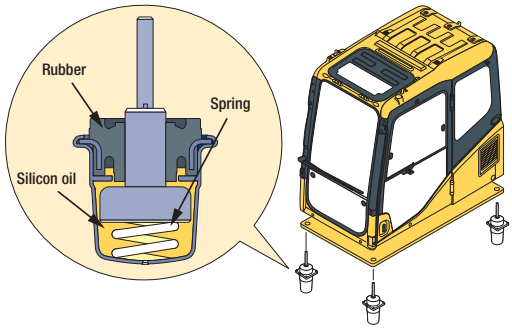

Roof hatch

12-Volt power supply and (optional) radio cassette

Climate control

Bottle holder and magazine rack

Safety features

Multi-position controls

The multi-position, proportional pressure control levers allow the operator to work in comfort whilst maintaining precise control. A double-slide mechanism allows the seat and controllers to move together, or independently, allowing the operator to position the controllers for maximum productivity and comfort.

Hot and cool box

3 button lever

Seat sliding range: 340 mm

Quick-coupler piping standard

Thermal guard

Anti-slip plates

Large handrail for safe access

Large side-view, rear, and sidewise mirrors

Large serrated steps

Audible travel alarm

REVOLUTIONARY MACHINE MANAGEMENT

KOMTRAX

The Komatsu Tracking System, KOMTRAX™, provides a revolutionary new way to monitor your equipment, anytime, anywhere. It lets you pin-point the precise location of your machines and obtain real-time machine data. Using GPS location and communication satellite technology, it's designed to be future proof and will meet your demands today and tomorrow.

Komtrax will help you to answer the three most important questions you have about your machine:

- Is the machine making money
- Is the machine safe
- Is the machine in good health

For more details, please ask your distributor for a copy of the Komtrax brochure.

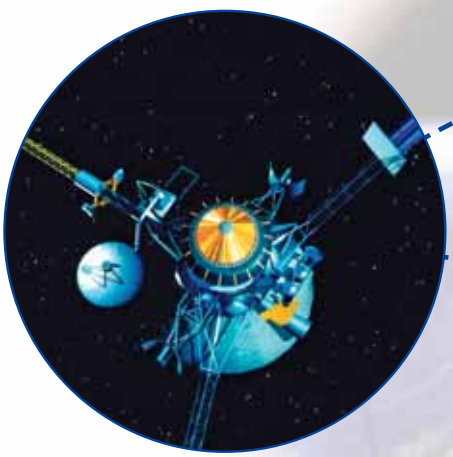

KOMTRAX™ server

Check machine location

Customer

Check service meter

Annual working hour record

Caution and periodic maintenance

Working record (fuel level, hours etc.)

There are certain countries where KOMTRAX™ is not yet available, please contact your distributor when you want to activate the system.
Komtrax will not operate if the satellite signal is blocked or obscured.

ECOLOGY & ECONOMY FEATURES

New ECOT3 engine

To meet EU Stage IIIA regulations whilst maintaining our industry backing fuel efficiency advantages, Komatsu introduces the all new ECOT3™ engine series. The Komatsu SAA4D107E-1 engine meets EPA Tier III, and EU Stage IIIA emissions regulations and reduces NOx emissions by 30%.

- Electronic control system
- High pression common rail fuel injection
- New combustion system
- Air-to-air cooling system

Low operating noise

Reduced noise levels during operation due to low-noise engine and other developments.

- Electronically controlled common rail engine
- Multi-staged injection
- Highly rigid cylinder block
- Low noise muffler
- Optimal arrangement of sound-absorbing materials

Easy end-of-life recycling

The PC160LC-7 is designed with the consideration of end-of-life recycling, effectively reducing its environmental impact.

- All exterior parts are made of steel.
- Extended engine oil, hydraulic oil and filter replacement intervals reduce environmental impact.
- All plastic parts are given a material code symbol.

VHMS

VHMS (Vehicle Health Monitoring System)

The VHMS's precise health-check system indicates all of the machine's running conditions. At the beginning of, and during, each work shift, abnormality information and machine functions can be checked from the operator's seat.

New features: VHMS machine health monitoring

- Up to four different mechanical system measurements can be monitored at the same time.
- A "Maintenance Indicator" function has been added. (Filter and oil replacement time display function).
- Mechanical system failures are now monitored, in addition to electrical system failures.
- Failures are indicated with a 6-digit failure code.

Displays running conditions and abnormality indications

At the operator's fingertips: the VHMS controller monitors engine oil level, cooling water level, fuel level, engine water temperature, engine oil pressure, battery charging level, air filter clogging, and more.
The monitor also indicates whenever abnormalities are detected.

Maintenance alert assistance

The VHMS monitor alerts when oil and filters need to be replaced.

Operation data memory

The system memorises machine operating data such as engine output, hydraulic pressure, and more.

Trouble data memory

The monitor stores and recalls electrical system and mechanical system failures and abnormalities for effective troubleshooting. The twenty most-recent electrical system failures are stored. Mechanical system failures cannot be erased, ensuring accurate documentation of vital service management information.

VHMS 'real time monitoring system'

The 'real time monitoring system' displays up to four different operating parameters simultaneously, giving the mechanic a total overview for faster troubleshooting. Parameters include operating conditions such as hydraulic oil pressure, engine RPMs, various voltages and currents, and even temperature measurement.

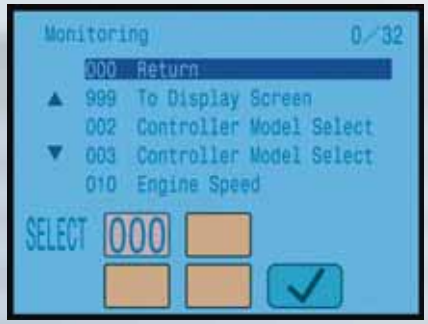

Real time monitoring

Reducing maintenance costs

Extended replacement intervals for engine oil and filters

New, high-performance filters are used in the hydraulic circuit and engine. Replacement intervals for the hydraulic oil filter have been significantly extended, reducing maintenance costs.

Replacement intervals	PC160LC-7
Engine oil	500 h
Engine oil filter	500 h
Hydraulic oil	5.000 h
Hydraulic oil filter	1.000 h

With SCSH bushings, all work equipment lubrication intervals have been extended

Newly-developed SCSH (Steel Copper Sinter Hard Material) bushings are used on all work equipment joints*. As a result, all work equipment bushing lubrication intervals have been significantly extended, with some joints only needing lubrication every 500 hours, thus reducing maintenance costs.

* Available for bucket pin, depending on bucket design

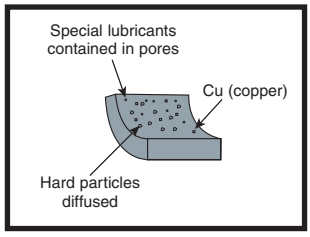

SCSH bushing

Tungsten carbide-injected bushing

Tungsten carbide is injected into the end faces of the arm-top bushing to form a hard film. This reduces the wear of the surface contact areas and fluttering of the bucket.

Trouble data memory

Maintenance record

Maintenance mode change

MAINTENANCE FEATURES

Side-by-side cooling

Since the radiator, aftercooler and oil cooler are arranged in parallel, it is easy to clean, remove and install them.

Easy access to the engine oil filter and fuel drain valve

The engine oil filter and fuel drain valve are mounted remotely to improve accessibility.

Easy maintenance

Komatsu designed the PC160LC-7 to have easy service access. By doing this, routine maintenance and servicing are less likely to be skipped.

Water separator

This is standard equipment which removes any water that has become mixed with the fuel, preventing fuel system damage.

Washable floor

The floor is easy to keep clean. The gently inclined surface has a flanged floormat and drainage holes to facilitate runoff.

Flexible warranty

When you purchase Komatsu equipment, you gain access to a broad range of programmes and services that have been designed to help you get the most from your investment. For example, Komatsu's Flexible Warranty Programme provides a range of extended warranty options on the machine and its components. These can be chosen to meet your individual needs and activities.This programme is designed to help reduce total operating costs.

SPECIFICATIONS

ENGINE

Model ..... Komatsu SAA4D107E-1
Type ..... Common rail direct injection, water-cooled, emissionised, turbocharged, after-cooled diesel
Engine power
at rated engine speed ..... 2.200 rpm
ISO 14396 ..... 90,0 kW / 121 HP
ISO 9249 (net engine power) ..... 86,0 kW / 115 HP
No. of cylinders 4
Bore × stroke ..... 107 × 120 mm
Displacement ..... 4,46 ltr
Battery ..... 2 × 12 V/120 Ah
Alternator ..... 24 V/60 A
Starter motor ..... 24 V/4,5 kW
Air filter type ..... Double element type with monitor panel dust indicator and auto dust evacuator
Cooling ..... Suction type cooling fan with radiator fly screen

HYDRAULIC SYSTEM

Type ..... HydrauMind. Closed-centre system with load sensing and pressure compensation valves
Additional circuits ..... Depending on the specification up to 2 additional circuits can be installed
Main pump ..... variable displacement piston pump supplying boom, arm, bucket, swing and travel circuits
Maximum pump flow ..... 312 ltr/min
Relief valve settings
Implement ..... 380 bar
Travel ..... 380 bar
Swing ..... 295 bar
Pilot circuit ..... 33 bar

ENVIRONMENT

Engine emissions ..... Fully complies with EU Stage IIIA exhaust emission regulations
Noise levels
LwA external ..... 101 dB(A) (2000/14/EC Stage II)
LpA operator ear ..... 68 dB(A) (ISO 6396 dynamic test)

SWING SYSTEM

Type ..... Hydrostatic
Swing lock ..... Mechanical disc brake
Swing speed ..... 0 - 12 rpm
Swing torque ..... 44,3 kNm

DRIVES AND BRAKES

Steering control ..... 2 levers with pedals giving full independent control of each track
Drive method ..... Hydrostatic
Travel operation ..... Automatic 2-speed selection
Gradeability ..... 70%, 35°
Max. travel speeds
Lo / Hi ..... 3,4 / 5,5 km/h
Maximum drawbar pull ..... 15.950 kg
Brake system ..... Hydraulically operated discs in each travel motor

UNDERCARRIAGE

Construction ..... X-frame centre section with box section track-frames
Track assembly
Type ..... Fully sealed
Shoes (each side) 44
Tension ..... Combined spring and hydraulic unit
Rollers
Track rollers (each side) 7
Carrier rollers (each side) 2

COOLANT AND LUBRICANT CAPACITY (REFILLING)

Fuel tank ..... 280 ltr
Radiator ..... 17,3 ltr
Engine oil ..... 16,0 ltr
Swing drive ..... 4,5 ltr
Hydraulic tank ..... 121 ltr
Final drive (each side) ..... 4,5 ltr

OPERATING WEIGHT (APPR.)

Operating weight, including specified work equipment, 2,6 m arm, 625 kg bucket, operator, lubricant, coolant, full fuel tank and the standard equipment.

	MONO BOOM		TWO-PIECE BOOM	
Triple grouser shoes	Operating weight	Ground pressure	Operating weight	Ground pressure
500 mm	17.160 kg	0,49 kg/cm²	17.690 kg	0,50 kg/cm²
600 mm	17.380 kg	0,42 kg/cm²	17.910 kg	0,43 kg/cm²
700 mm	17.600 kg	0,36 kg/cm²	18.130 kg	0,37 kg/cm²
800 mm	17.820 kg	0,32 kg/cm²	18.350 kg	0,33 kg/cm²

MACHINE DIMENSIONS

MACHINE DIMENSIONS		PC160LC-7
A	Overall width of upper structure	2.490 mm
B	Overall height of cab	2.970 mm
C	Overall length of basic machine	4.373 mm
D	Tail length	2.390 mm
	Tail swing radius	2.435 mm
E	Clearance under counterweight	1.055 mm
F	Machine tail height	2.090 mm
G	Ground clearance	440 mm
H	Tumbler centre distance	3.170 mm
I	Track length	3.965 mm
J	Track gauge	1.990 mm
K	Track shoe width	500, 600, 700, 800 mm
L	Overall track width with 500 mm shoe	2.490 mm
	Overall track width with 600 mm shoe	2.590 mm
	Overall track width with 700 mm shoe	2.690 mm
	Overall track width with 800 mm shoe	2.790 mm

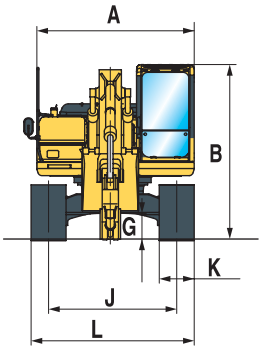

MONO BOOM

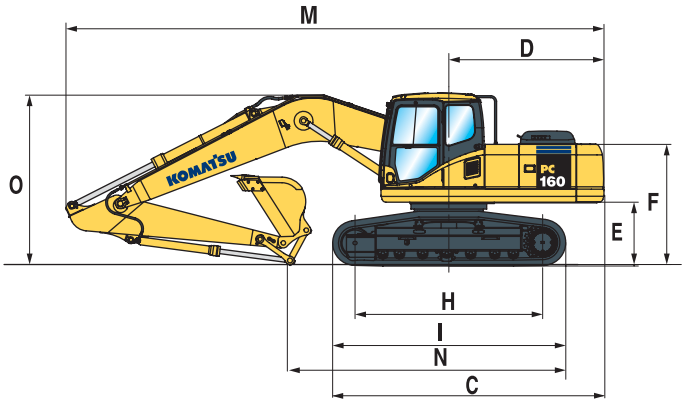

TWO-PIECE BOOM

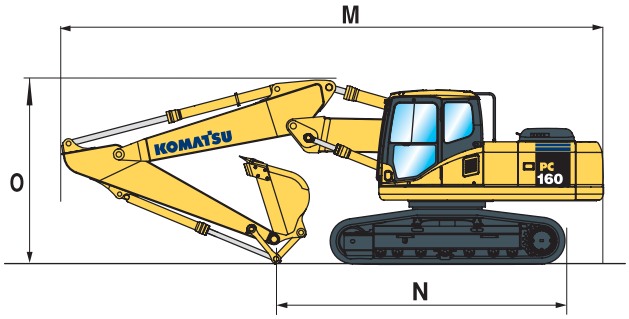

ARM LENGTH		MONO BOOM			TWO-PIECE BOOM		
		2,2 m	2,6 m	2,9 m	2,2 m	2,6 m	2,9 m
M	Transport length	8.565 mm	8.565 mm	8.565 mm	8.490 mm	8.490 mm	8.475 mm
N	Length on ground (transport)	5.130 mm	4.760 mm	4.565 mm	5.180 mm	4.825 mm	4.660 mm
O	Overall height (to top of boom)	2.990 mm	3.000 mm	3.100 mm	2.940 mm	2.980 mm	3.030 mm

BUCKET OPTIONS & DIGGING FORCES

Specifications and equipment may vary according to regional availability

BUCKET AND ARM COMBINATION			PC160LC-7		
Width	Capacity SAE	Weight	2,2 m	2,6 m	2,9 m
600 mm	0,38 m³	385 kg	○	○	○
700 mm	0,47 m³	435 kg	○	○	○
800 mm	0,56 m³	465 kg	○	○	○
900 mm	0,66 m³	495 kg	○	○	○
1.000 mm	0,75 m³	530 kg	□	□	□
1.200 mm	0,94 m³	615 kg	△	△	–

Please consult with your distributor for the correct selection of buckets and attachments to suit the application. The recommendations are given as a guide only, based on typical operating conditions.

○ Material weight up to 1,8 t/m³
□ Material weight up to 1,5 t/m³
△ Material weight up to 1,2 t/m³
– Not usable

A full range of Komatsu wear parts is available.

A wide range of attachments is available. Please consult your distributor for details of the full range.

BUCKET AND ARM FORCE			
Arm length	2,2 m	2,6 m	2,9 m
Bucket digging force	11.500 kg	11.500 kg	11.500 kg
Bucket digging force at PowerMax	12.500 kg	12.500 kg	12.500 kg
Arm crowd force	9.050 kg	8.200 kg	7.550 kg
Arm crowd force at PowerMax	9.700 kg	8.800 kg	8.100 kg

WORKING RANGE

MONO BOOM

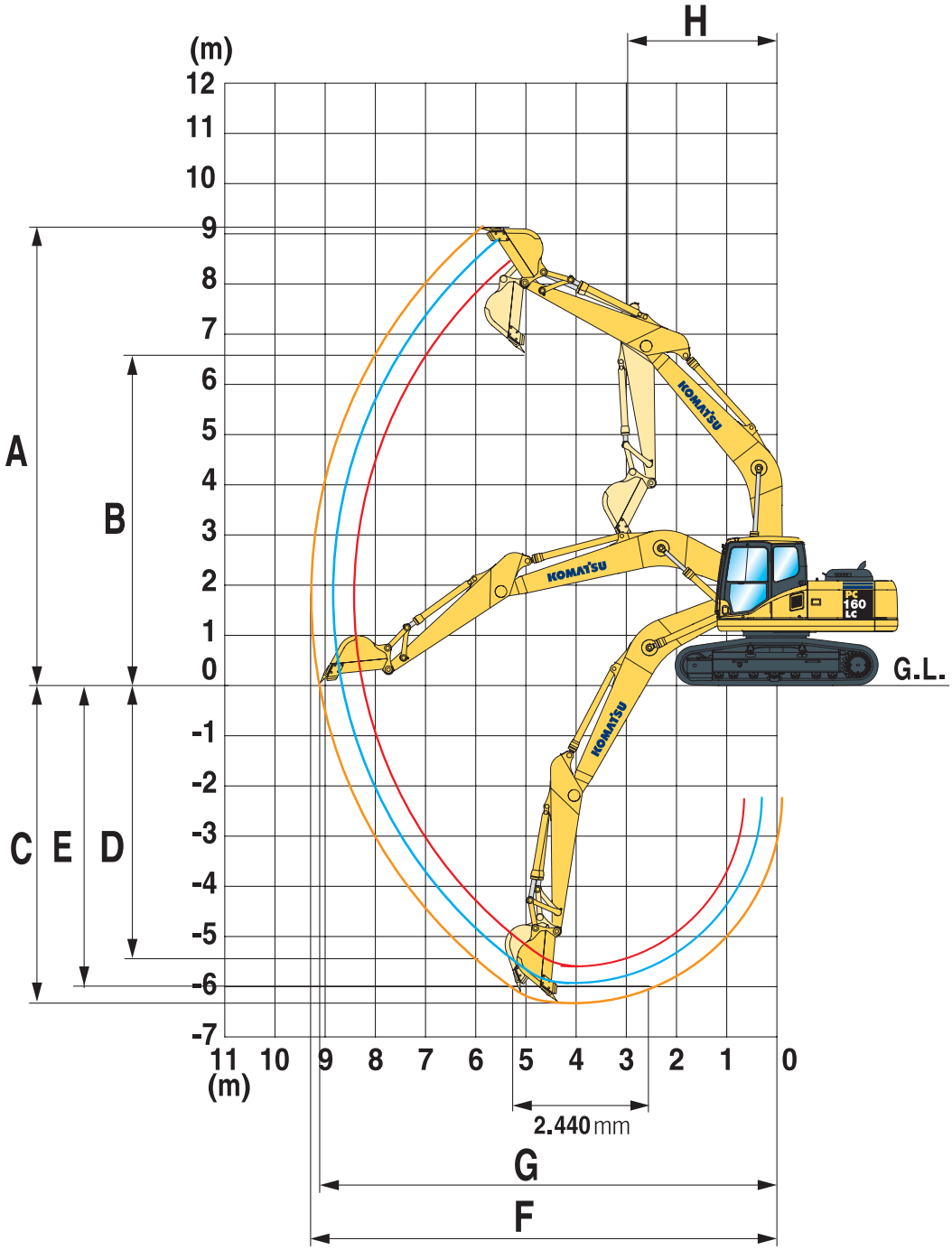

ARM LENGTH		2,2 m	2,6 m	2,9 m
A	Max. digging height	8.910 mm	8.980 mm	9.130 mm
B	Max. dumping height	6.280 mm	6.370 mm	6.525 mm
C	Max. digging depth	5.610 mm	5.960 mm	6.250 mm
D	Max. vertical wall digging depth	4.860 mm	5.040 mm	5.320 mm
E	Max. digging depth of cut for 2,44 m level	5.375 mm	5.740 mm	6.050 mm
F	Max. digging reach	8.680 mm	8.960 mm	9.235 mm
G	Max. digging reach at ground level	8.510 mm	8.800 mm	9.075 mm
H	Min. swing radius	3.040 mm	2.990 mm	2.995 mm

TWO-PIECE BOOM

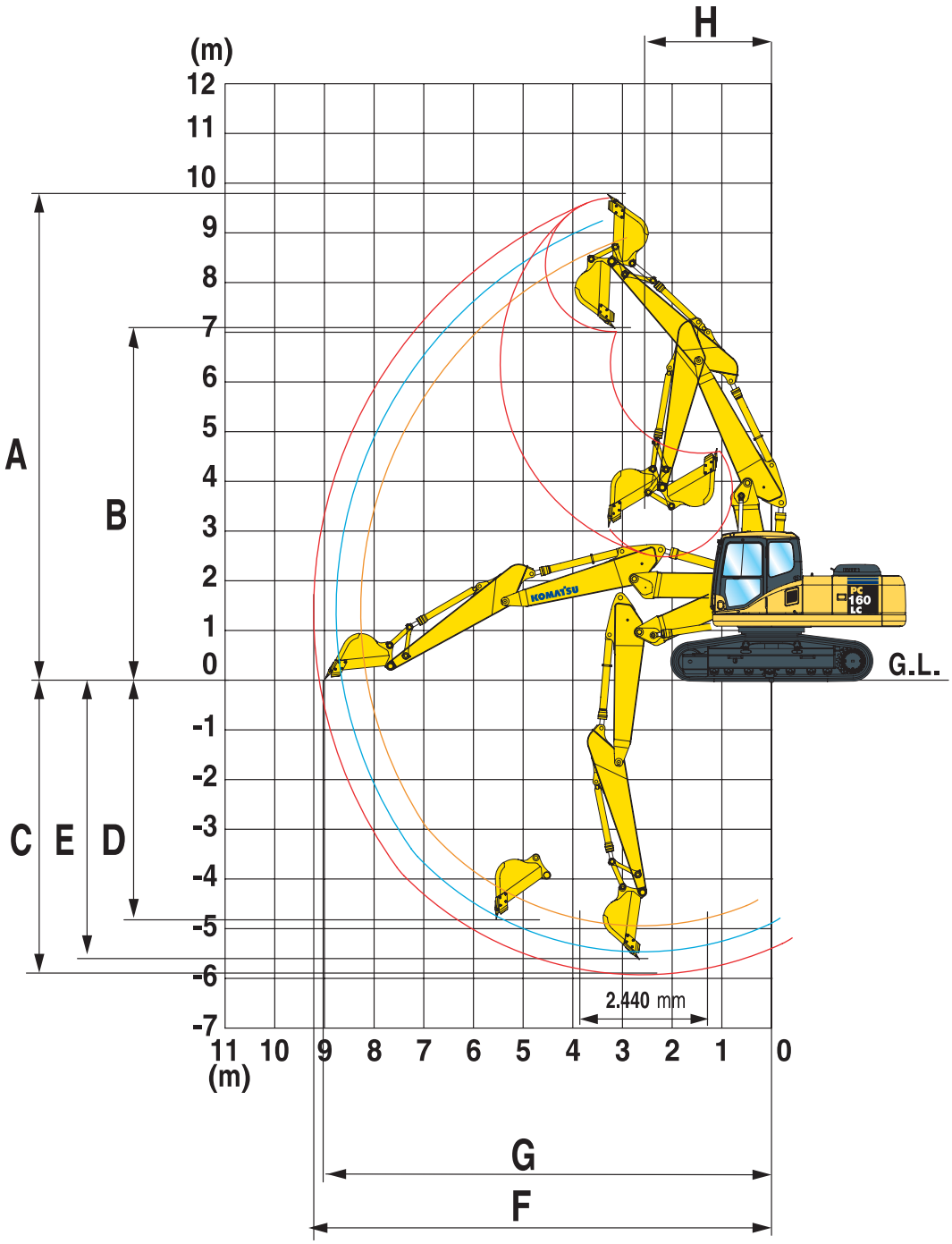

ARM LENGTH		2,2 m	2,6 m	2,9 m
A	Max. digging height	9.425 mm	9.580 mm	9.760 mm
B	Max. dumping height	6.755 mm	6.910 mm	7.100 mm
C	Max. digging depth	5.185 mm	5.515 mm	5.800 mm
D	Max. vertical wall digging depth	4.230 mm	4.530 mm	4.850 mm
E	Max. digging depth of cut for 2,44 m level	5.065 mm	5.400 mm	5.690 mm
F	Max. digging reach	8.640 mm	8.930 mm	9.200 mm
G	Max. digging reach at ground level	8.470 mm	8.765 mm	9.045 mm
H	Min. swing radius	2.600 mm	2.600 mm	2.600 mm

LIFTING CAPACITY

MONO BOOM

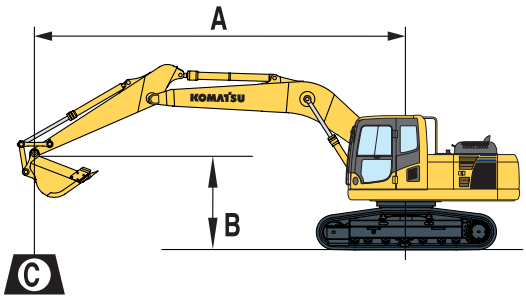

A – Reach from swing centre

B – Bucket hook height

C – Lifting capacities, including bucket, bucket linkage (200 kg) and bucket cylinder (140 kg)

– Rating over front

– Rating over side

– Rating at maximum reach

When removing bucket, linkage or cylinder, lifting capacities can be increased by their respective weights

Arm length	A / B				7,5 m		6,0 m		4,5 m		3,0 m		1,5 m	
With 500 mm shoes (2,2 m; 495 kg 0,65 m³)	6,0 m	kg	* 2.400	* 2.400			* 3.250	2.850						
	4,5 m	kg	* 2.350	2.050			* 4.450	2.850	* 5.000	4.650				
	3,0 m	kg	* 2.450	1.800			4.450	2.700	* 6.300	4.300	* 9.700	8.150		
	1,5 m	kg	* 2.700	1.700	2.950	1.750	4.300	2.550	6.700	3.850				
	0,0 m	kg	2.950	1.700			4.150	2.400	6.550	3.750	* 6.750	* 6.750		
	-1,5 m	kg	3.300	1.950			4.100	2.400	6.500	3.650	* 10.600	6.950	* 6.200	* 6.200
	-3,0 m	kg	4.200	2.450					6.550	3.700	* 10.500	7.100	* 10.250	* 10.250
	-4,5 m	kg	* 4.850	4.200							* 7.050	* 7.050		

With 500 mm shoes (2,6 m; 495 kg 0,65 m³)														
	6,0 m	kg	* 2.000	* 2.000			* 3.350	2.900						
	4,5 m	kg	* 2.000	1.900			* 4.200	2.850						
	3,0 m	kg	* 2.050	1.650	3.050	1.800	4.500	2.750	* 5.900	4.400	* 8.700	8.450		
	1,5 m	kg	* 2.300	1.600	3.000	1.750	4.300	2.550	6.900	4.000	* 7.850	7.350		
	0,0 m	kg	* 2.650	1.600	2.900	1.700	4.150	2.450	6.600	3.750	* 7.350	6.950		
	-1,5 m	kg	3.050	1.750			4.100	2.350	6.500	3.650	* 10.150	6.950	* 5.800	* 5.800
	-3,0 m	kg	3.800	2.200			4.100	2.400	6.500	3.650	* 11.150	7.050	* 9.200	* 9.200
	-4,5 m	kg	* 4.950	3.450					* 5.550	3.850	8.200	7.350		

With 500 mm shoes (2,9 m; 495 kg 0,65 m³)														
	6,0 m	kg	* 1.750	* 1.750			* 3.250	2.950						
	4,5 m	kg	* 1.700	* 1.700	* 2.250	1.850	* 3.900	2.850						
	3,0 m	kg	1.800	1.550	3.050	1.800	4.500	2.700	* 5.500	4.400	* 7.850	* 7.850		
	1,5 m	kg	* 1.950	1.450	2.950	1.700	4.300	2.550	6.900	4.000	* 10.000	7.450		
	0,0 m	kg	* 2.250	1.450	2.850	1.650	4.100	2.400	6.600	3.700	* 7.650	6.950		
	-1,5 m	kg	* 2.800	1.600	2.850	1.600	4.050	2.300	6.400	3.600	* 9.750	6.800	* 5.400	* 5.400
	-3,0 m	kg	3.450	1.950			4.050	2.300	6.400	3.600	* 11.500	6.900	* 8.400	* 8.400
	-4,5 m	kg	* 4.800	2.950					* 6.050	3.700	* 8.900	7.200		

* Load is limited by hydraulic capacity rather than tipping.
Ratings are based on SAE Standard No. J1097.
Rated loads do not exceed 87% of hydraulic lift capacity or 75% of tipping load.

TWO-PIECE BOOM

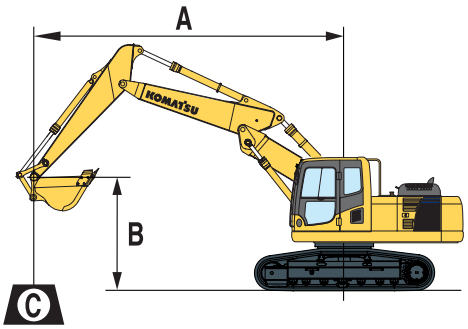

A – Reach from swing centre

B – Bucket hook height

C – Lifting capacities, including bucket, bucket linkage (200 kg) and bucket cylinder (140 kg)

– Rating over front

– Rating over side

– Rating at maximum reach

When removing bucket, linkage or cylinder, lifting capacities can be increased by their respective weights

Arm length	A / B		⊗		7,5 m		6,0 m		4,5 m		3,0 m		1,5 m	
With 500 mm shoes (2,2 m; 495 kg 0,65 m³)	7,5 m	kg	*3.050	*3.050					*3.350	*3.350				
	6,0 m	kg	*2.650	*2.650			*2.900	2.850	*5.100	4.900				
	4,5 m	kg	*2.550	2.100			4.650	2.800	*6.350	4.650				
	3,0 m	kg	*2.650	1.800			4.450	2.650	7.250	4.250	*14.050	8.000		
	1,5 m	kg	*2.850	1.700			4.250	2.350	6.750	3.800				
	0,0 m	kg	3.050	1.700			4.100	2.300	6.450	3.550	*7.100	6.550		
	- 1,5 m	kg	3.400	1.900			4.050	2.250	6.350	3.450	*11.000	6.600		
	- 3,0 m	kg							*5.650	3.550				

With 500 mm shoes (2,6 m; 495 kg 0,65 m³)												
	7,5 m	kg	*2.500	*2.500					*3.550	*3.550		
	6,0 m	kg	*2.200	*2.200			*3.300	2.950				
	4,5 m	kg	*2.150	1.950			*4.600	2.850	*5.300	4.750		
	3,0 m	kg	*2.200	1.700	*2.850	1.750	4.500	2.650	7.350	4.300	*13.200	8.300
	1,5 m	kg	*2.400	1.550	2.950	1.600	4.250	2.350	6.800	3.850	*8.300	7.000
	0,0 m	kg	*2.750	1.600	2.850	1.600	4.050	2.300	6.450	3.550	*7.800	6.550
	- 1,5 m	kg	3.150	1.750			4.000	2.250	6.300	3.450	*10.900	6.550
	- 3,0 m	kg	3.950	2.200			4.050	2.300	6.350	3.500	*8.250	6.700

With 500 mm shoes (2,9 m; 495 kg 0,65 m³)												
	7,5 m	kg	*2.150	*2.150								
	6,0 m	kg	*1.900	*1.900			*3.300	2.950				
	4,5 m	kg	*1.850	1.800	*1.850	1.800	*4.250	2.850	*4.550	*4.550		
	3,0 m	kg	*1.900	1.550	3.050	1.750	4.500	2.650	7.400	4.350	*12.450	8.550
	1,5 m	kg	*2.050	1.450	2.900	1.600	4.250	2.350	6.850	3.850	*10.500	7.150
	0,0 m	kg	*2.350	1.450	2.850	1.550	4.050	2.250	6.450	3.500	*8.050	6.550
	- 1,5 m	kg	2.900	1.600			3.950	2.200	6.250	3.350	*10.400	6.450
	- 3,0 m	kg	3.550	1.950			3.950	2.200	6.300	3.400	*9.200	6.550

* Load is limited by hydraulic capacity rather than tipping.
Ratings are based on SAE Standard No. J1097.
Rated loads do not exceed 87% of hydraulic lift capacity or 75% of tipping load.

HYDRAULIC EXCAVATOR

STANDARD EQUIPMENT

- Komatsu SAA4D107E-1, 90,0 kW turbocharged common rail direct injection diesel engine, EU Stage IIIA compliant
- Double element type air cleaner with dust indicator and auto dust evacuator
- Suction type cooling fan with radiator fly screen
- Automatic fuel line de-aeration
- Automatic engine warm-up system
- Engine overheat prevention system
- Fuel control dial
- Auto-deceleration function
- Engine key stop
- Alternator 24 V/60 A
- Batteries 2 × 12 V/120 Ah
- Starter motor 24 V/4,5 kW
- Electronic closed-centre load sensing (E-CLSS) hydraulic system (HydrauMind)
- Pump and engine mutual control (PEMC) system
- Multi-function colour monitor with equipment management monitoring system (EMMS)
- 4-working mode selection system; Power mode, economy mode, breaker mode and lifting mode
- PowerMax function
- Standard counterweight
- Hydrostatic, 2-speed travel system with automatic shift and planetary gear type final drives, and hydraulic lock service brakes
- Adjustable PPC wrist control levers with 3 button controls for arm, boom, bucket and swing
- PPC control levers and pedals for steering and travel
- KOMTRAX™ Komatsu Tracking System
- SpaceCab™; Highly pressurised and tightly sealed viscous mounted cab with tinted safety glass windows, opening roof hatch with window pull-up type front window with locking device, removable lower window, front window wiper with intermittent feature, ashtray, luggage box, floor mat
- Heated air suspension seat with lumbar support, height adjustable arm rests and retractable seat belt
- Automatic climate control system
- 12 Volt power supply
- Beverage holder and magazine rack
- Hot and cool box
- Radio cassette
- Overload warning device
- Electric horn
- Audible travel alarm
- Track roller guards
- Track frame under-guards
- Lockable fuel cap and covers
- Remote greasing for swing circle and pins
- Fuel supply pump
- Boom safety valves
- Large handrails, rear-view mirrors and counterweight mirror
- Toolkit and spare parts for first service
- Lights; 2 revolving frame lights and 1 boom light
- Quick-coupler piping
- Engine ignition can be password secured on request
- Standard colour scheme and decals
- Parts book and operator manual
- 500 mm triple grouser track-shoes

OPTIONAL EQUIPMENT

- 600 mm; 700 mm; 800 mm triple grouser track-shoes
- Mono boom
- Two-piece boom
- 2,2 m; 2,6 m; 2,9 m arms
- Additional hydraulic circuits
- Automatic greasing system
- Arm safety valve
- OPG Level II front guard (FOPS)
- OPG Level II top guard (FOPS)
- Service points
- Additional working lamps, including cab roof lights, r.h. boom lamp, counterweight rear lamp and beacon
- Bio oil
- Lower wiper
- Rain visor (not with OPG)
- Komatsu buckets
- Komatsu quick couplers
- Customised paint
- Low ground pressure undercarriage (LGP) with 1.000 mm; 1.200 mm; 1.400 mm track-shoes
- Further equipment on request

Komatsu Europe International NV
Mechelsesteenweg 586
B-1800 VILVOORDE (BELGIUM)
Tel. +32-2-255 24 11
Fax +32-2-252 19 81
www.komatsueurope.com

UESS13101 02/2009

Materials and specifications are subject to change without notice.
KOMATSU is a trademark of Komatsu Ltd. Japan.

**Printed in Europe – This specification sheet may contain attachments and optional equipment that are not available in your area.
Please consult your local Komatsu distributor for those items you may require. Materials and specifications are subject to change without notice.**